Technical Manual
for
Universal Type

7040-B/0

Come programmare il "COSTO del CREDITO"

Determinare il rapporto che intercorre tra le monete introducibili nelle varie gettoniere dividendo singolarmente i vari tipi di monete per lo stesso "numero" (il numero di massimo possibile*) avendo sempre resto zero.

Ordine crescente delle monete:

1a moneta = moneta di valore inferiore
2a moneta = moneta di valore intermedio, oppure equivalente alla 1a o alla 3a
3a moneta = moneta di valore superiore

ESEMPI:

- 1a Gettoniera - 1a moneta da 100L.
  2a Gettoniera - 2a moneta da 100L.
  3a Gettoniera - 3a moneta da 200L.

  RAPPORTO (R.) = $\frac{100L.-100L.-200L.}{100(*)}$ =1-1-2 { 1a moneta=valore 1; 2a moneta=valore 1; 3a moneta=valore 2 }

- 1a Gettoniera - moneta da 1 Marco... ...=Valore 1
  2a Gettoniera - moneta da 2 Marchi.. R=$\frac{1DM-2DM-5DM}{1(*)}$=1-2-5 ...=Valore 2
  3a Gettoniera - moneta da 5 Marchi.. ...=Valore 5

- 1a Gettoniera - moneta da 5 Dinari.. ...=Valore 1
  2a Gettoniera - moneta da10 Dinari..R= $\frac{5D-10D-}{5(*)}$ =1-2 ...=Valore 2
  3a Gettoniera - non usata

- 1a Gettoniera - moneta da 10 Pence... ...=Valore 1
  2a Gettoniera - moneta da 50 Pence..R=$\frac{10P-50P}{10(*)}$ =1-5 ...=Valore 5
  3a Gettoniera - non usata

Fissare il numero di crediti che si danno con la moneta di valore superiore

Prendere il risultato del RAPPORTO e formulare la seguente "equivalenza":

A = Valore della 1a moneta
B = Valore della 2a moneta
C = Valore della 3a moneta
X = $\frac{Y}{C}$
Y = n° Crediti di C

$$A:(A\cdot X)=B:(B\cdot X)=C:Y$$

Determinare il costo minimo di un credito

N.b.: dalle operazioni "A•X" e "B•X" prendere solamente il numero intero, non considerando quindi i decimali che ne possono risultare.

ESEMPI:	Valore 1 MONETA	Crediti 1 MONETA	Valore 2 MONETA	Crediti 2 MONETA	Valore 3 MONETA	Crediti 3 MONETA
- 100L. - 100L. - 200L. R= 1-1-2/1PL.; 1:(1•X)=1:(1•X)=2:1 x=1/2 =0,5	1	0,~~5~~	1	0,~~5~~	2	1
- 1DM-2DM-5DM R= 1-2-5/6PL.; x=6/5=1,2	1	1,~~2~~	2	2,~~4~~	5	6
- 1DM-2DM-5DM R= 1-2-5/3PL.; x=3/5=0,6	1	0,~~6~~	2	1,~~2~~	5	3

v 1M	c 1M	v 2M	c 2M	v 3M	c 3M
1:0,	X	=5:1,	X	=10:3	
1:0,	X	=5:2=		10:4	

- 1Fr - 5Fr - 10 Fr
  R= 1-5-10/3PL.; x=3/10=0,3

- 1Fr - 5Fr - 10 Fr
  R= 1-5-1P/4PL.; x=4/10=0,4

N.b.: a parità di valore il numero dei crediti che vengono dati non cambia se si introduce una singola moneta oppure più monete di valore inferiore, purchè il loro valore globale sia uguale a quello della singola moneta.

- La programmazione deve sempre essere effettuato su ciascuna delle tre gettoniere.

Usando solo due delle tre gettoniere disponibili posizionate la restante come segue:

1) Perchè non abbia alcuna incidenza sulla programmazione fissare valore e crediti uguali alla moneta di valore maggiore.

ESEMPI:

v 1M	c 1M	v 2M	c 2M	v 3M	c 3M
1:0=2:1=2:1					

- 2x100L./1PL. - 1x200L./1PL.-N.u.
  R= 1 - 2 -

- 2x5D./1PL. - 1x10D./1PL. - N.u.
  R= 1 - 2 - 1:0=2:1=2:1

2) Per deteminare il costo minimo di un credito

ESEMPI:

- 3x100L./1PL - 3x100L./1PL. - N.u.
  R= 1 - 1 - 3 1:0=1:0=3:1

- 4x1Fr/1PL. - N.u. - 1x10Fr/3PL.
  R= 1 - 4 - 10 1:0=4:1=10:3

- 3x5D/1PL. - 3x10D/2PL. - N.u.
  R= 1 - 2 - 3 1:0=2:0=3:1

	SW "A" 1	2 3 4	5 6 7	8	SW "B" 1	2 3 4	5 6 7 8	VALUE	CREDIT	
Peso moneta 1ª Gettoniera (1ª moneta)	0 -							1 2		Usati per determinare il valore della moneta
Peso moneta 2ª Gettoniera (2ª moneta)		0 0 0 - 0 0 0 - 0 - - 0 0 0 - - 0 - 0 - - - - -						1 2 3 4 5 6 8 10		
Peso moneta 3ª Gettoniera (3ª moneta)			0 0 0 - 0 0 0 - 0 - - 0 0 0 - - 0 - 0 - - - - -					2 3 4 5 6 8 10 20		
1ª GETTONIERA, Crediti ottenibili per ogni moneta				0 0 - 0 0 - - -					0 1 2 3	Usati per determinare i crediti ottenibili con una singola moneta
2ª GETTONIERA, Crediti ottenibili per ogni moneta					0 0 0 - 0 0 0 - 0 - - 0 0 0 - - 0 - 0 - - - - -				0 1 2 3 4 5 6 7	
3ª GETTONIERA, Crediti ottenibili per ogni moneta						0 0 0 0 - 0 0 0 0 - 0 0 - - 0 0 0 0 - 0 - 0 - 0 0 - - 0 - - - 0 0 0 0 - - 0 0 - 0 - 0 - - - 0 - 0 0 - - - 0 - - 0 - - - - - - -		1 2 3 4 5 6 7 8 9 10 11 12 13 14 15 16	

0 = ON - = OFF

How to adjust "CREDIT COST"

State ratio of coins to be inserted into coin mechanisms, dividing separatly each type of coin by the same'number' (as bigger as possible *) to have remainder zero.

Increasing coin order:

1st coin = lower value coin

2nd coin = medium value coin, or equivalent to 1st and 3rd coin

3rd coin = higher value coin

EXAMPLES:

-1st coin mechanism - 1st 100Lit.coin

2nd coin mechanism - 2nd 100Lit.coin

3rd coin mechanism - 3rd 200Lit.coin

$$\text{RATIO (R.)} = \frac{100\ \text{Lit.}-100\ \text{Lit.}-200\ \text{Lit.}}{100\ (*)} = 1-1-2 \quad \begin{cases} \text{1st coin= value 1} \\ \text{2nd coin= value 1} \\ \text{3rd coin= value 2} \end{cases}$$

-1st coin mechanism-1DM coin

2nd coin mechanism-2DM coin

3rd coin mechanism-5DM coin

$$R = \frac{1DM-2DM-5DM}{1\ (*)} = 1-2-5 \quad \begin{matrix} \text{---= value 1} \\ \text{---= value 2} \\ \text{---= value 5} \end{matrix}$$

-1st coin mechanism-5 Dinars coin

2nd coin mechanism-10 Dinars coin

3rd coin mechanism-not used

$$R = \frac{5D-10\ D-}{5\ (*)} = 1-2 \quad \begin{matrix} \text{= value 1} \\ \text{= value 2} \end{matrix}$$

-1st coin mechanism-10 Pence coin

2nd coin mechanism-50 Pence coin

3rd coin mechanism-not used

$$R = \frac{10P-50P}{10(*)} = 1-5 \quad \begin{matrix} \text{= value 1} \\ \text{= value 5} \end{matrix}$$

Fix number of credits for the higher value coin

Consider ratio result and proceed with the following 'equivalence':

A = 1st coin value

B = 2nd coin value

C = 3rd coin value

$$A : (A \cdot X) = B : (B \cdot X) = C : Y$$

$$X = \frac{Y}{C}$$

Y = n° of Credits of 'C'

°/°

State minimum cost of a credit

Note: Consider only the whole number from "A X" and "B X",do not consider decimal numbers which could result.

EXAMPLES:	1coin value 1coin credits	2coin value 2coin credits	3coin value 3coin credits
-100 Lit. -100 Lit. -200 Lit.			
R= 1-1-2/1PL.;1:(1•X)=1:(1.X)=2:1 x=1/2=0,5	1:0,~~5~~=1:0,~~5~~=2:1		
-1DM-2DM-5DM			
R= 1-2-5/6PL.; x=6/5=1,2	1:1,~~2~~=2:2,~~4~~=5:6		
-1DM-2DM-5DM			
R= 1-2-5/3PL.; x=3/5ì0,6	1:0,~~6~~=2:1,~~2~~=5:3		
-1Fr.-5Fr.-10Fr.			
R=1-5-10/3PL.; x=3/10=0,3	1:0,~~3~~=5:1,~~5~~=10:3		
-1Fr.-5Fr.-10Fr.			
R=1-5-1P/4PL.; x=4/10=0,4	1:0,~~4~~=5:2= 10:4		

Note: For same value, credit number awarded doesn't change when one or more than one coin of lower value are introduced,provided that total value is the same of the single coin.

Adjustment must be executed on each of the three coin mechanisms. By using only two of the three coin mechanisms available, set the remaining as follows:

1)to avoid any incidence on adjustment, fix the same value and credits of higher value coin.

EXAMPLES:

-2x100L./1PL. - 1x200L./1PL. -N.U.

R= 1 - 2 - 1:0=2:1=2:1

°/°

	1coin value	1coin credit	2coin value	2coin credit	3coin value	3coin credit
-2x5D./1PL. - 1x10D./1PL. -N.U.						
R= 1 - 2 -	1:0=2:1=2:1					
2) To state the minimum cost of a credit:						
EXAMPLES:						
-3x100Lit./1PL. - 3x100Lit./1PL. - N.U.						
R= 1 - 1 - 3	1:0=1:0=3:1					
-4x1Fr/1PL. - N.U. - 1x10Fr./3PL.						
R= 1 - 4 - 10	1:0=4:1=10:3					
-3x5D./1PL. - 3x10D./2PL. - N.U.						
R= 1 - 2 - 3	1:0=2:0=3:1					

	1	2 3 4	5 6 7	8	1	2 3 4	5 6 7 8	VA	CRT	
1st coin mech. coin weight (1st coin)	0 -							1 2		Used to state coin value
2nd coin mech. coin weight (2nd coin)		0 0 0 - 0 0 0 - 0 - - 0 0 0 - - 0 - 0 - - - - -						1 2 3 4 5 6 8 10		
3rd coin mech. coin weght (3rd coin)			0 0 0 - 0 0 0 - 0 - - 0 0 0 - - 0 - 0 - - - - -					2 3 4 5 6 8 10 20		
1st coin mechanism credits per coin				0 0 - 0 0 - - -					0 1 2 3	Used to state credits per coin
2nd coin mechanism credits per coin					0 0 0 - 0 0 0 - 0 - - 0 0 0 - - 0 - 0 - - - - -				0 1 2 3 4 5 6 7	
3rd coin mechanism credits per coin							0 0 0 0 - 0 0 0 0 - 0 0 - - 0 0 0 0 - 0 - 0 - 0 0 - - 0 - - - 0 0 0 0 - - 0 0 - 0 - 0 - - - 0 - 0 0 - - - 0 - - 0 - - - - - - -		1 2 3 4 5 6 7 8 9 10 11 12 13 14 15 16	

0 = ON - = OFF

CREDITS/COIN ADJUSTEMENTS

COUNTRY	COIN CHUTE/ COIN	CREDITS	COIN 1		COIN 2		COIN 3		SW A								SW B								COUNTER
			V.	C.	V.	C.	V.	C.	1	2	3	4	5	6	7	8	1	2	3	4	5	6	7	8	
ITALY	1=100 L.	200L.= 1Pl.	1	0	1	0	2	1	0	0	0	0	0	0	0	0	0	0	0	0	0	0	0	0	x 100 L.
	2=100 L.	300L. =1Pl.	1	0	1	0	3	1	0	0	0	0	-	0	0	0	0	0	0	0	0	0	0	0	x 100 L.
	1=100 L.	200L. =1Pl.	1	0	2	1	2	1	0	-	0	0	0	0	0	0	0	-	0	0	0	0	0	0	x 100 L.
	2=200 L.	300L. =1Pl.	1	0	2	0	3	1	0	-	0	0	-	0	0	0	0	0	0	0	0	0	0	0	x 100 L.
	1=200 L.	200L. =1Pl.	2	1	2	1	2	1	-	-	0	0	0	0	0	-	0	-	0	0	0	0	0	0	x 100 L.
	2=200 L.	300L. =1PL.	2	0	2	0	3	1	-	-	0	0	-	0	0	0	0	0	0	0	0	0	0	0	x 100 L.
GREAT BRITAIN	1= 10 P.	20P =1PL.	1	0	5	3	5	3	0	0	0	-	-	-	0	0	0	-	-	0	0	-	0	0	x 10 P.
	2= 50 P.	50P =3Pl.																							
		10P =1Pl.	1	1	5	6	5	6	0	0	0	-	-	-	0	-	0	0	-	-	-	0	-	0	x 10 P.
		50P. =6Pl.																							
WEST GERMANY	1= 1DM	1DM =1PL.																							
	2= 2DM	2DM =3Pl.	1	1	2	3	5	7	0	-	0	0	-	-	0	-	0	-	-	0	0	-	-	0	x 1DM.
	3= 5DM	5DM =7Pl.																							
SWITZER-LAND		1DM =2Pl.																							
		2DM =5Pl.	1	2	2	5	5	14	0	-	0	0	-	-	0	0	-	-	0	-	-	0	-	-	x 1DM
		5DM =14Pl.																							
JUGOSLA-VIA	1= 5DIN	5DIN =1Pl.	1	1	2	2	2	2	0	-	0	0	0	0	0	-	0	0	-	0	-	0	0	0	x 5 DIN
	2=10DIN	10DIN =1Pl.	1	0	2	1	2	1	0	-	0	0	0	0	0	0	0	-	0	0	0	0	0	0	x 10DIN
FRANCE DENMARK SWEDEN	1= 1Fr.	2Fr. =1Pl.																							
	2= 5Fr.	5Fr. =3Pl.	1	0	5	3	10	7	0	0	0	-	0	-	-	0	0	-	-	0	0	-	-	0	x 1 F.
	3=10Fr.	10Fr. =7PL.																							
BELGIUM	1= 5Frs.	10F =1Pl.	1	0	2	1	2	1	0	-	0	0	0	0	0	0	0	-	0	0	0	0	0	0	x 5 F.
AUSTRIA	2= 10Frs.	15F. =1Pl.	1	0	2	0	3	1	0	-	0	0	-	0	0	0	0	0	0	0	0	0	0	0	x 5 F.
HUNGARY	1= 10F.	10F. =1Pl.	1	1	1	1	2	2	0	0	0	0	0	0	0	-	0	-	0	0	-	0	0	0	x 10 F.
	2= 10F.	15F. =1Pl.	1	0	1	0	3	2	0	0	0	0	-	0	0	0	0	0	0	0	-	0	0	0	x 10 F.

O= ON ; - = OFF; COIN 1 = Coin in coin chute; COIN 2 = Coin in coin chute 2; COIN 3=Coin in coin chute 3.

V.= VALUE ; C. = CREDIT

CEC 157 TELAIO ALIMENTAZIONI

monitor MANTAREX MTC 900

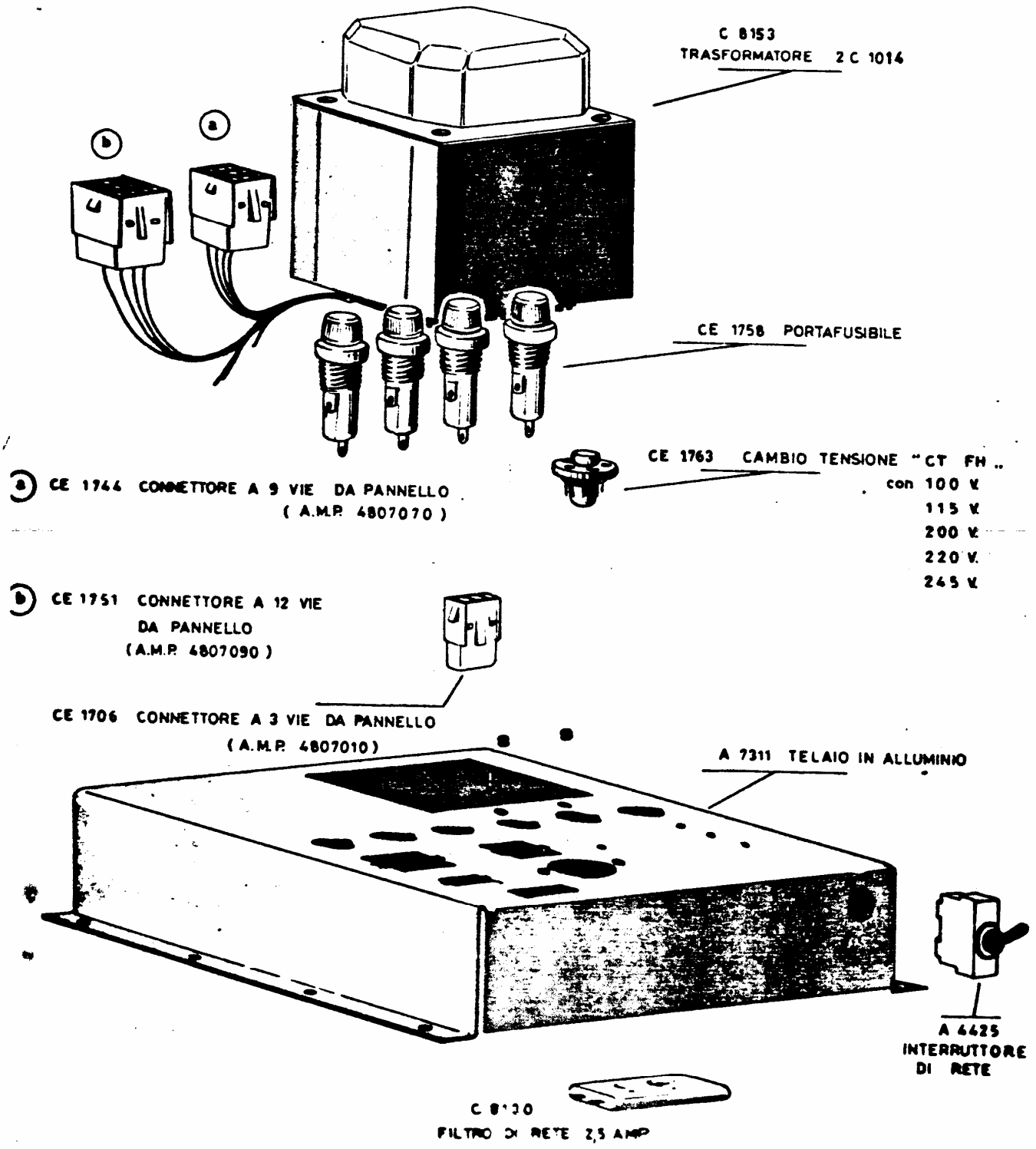

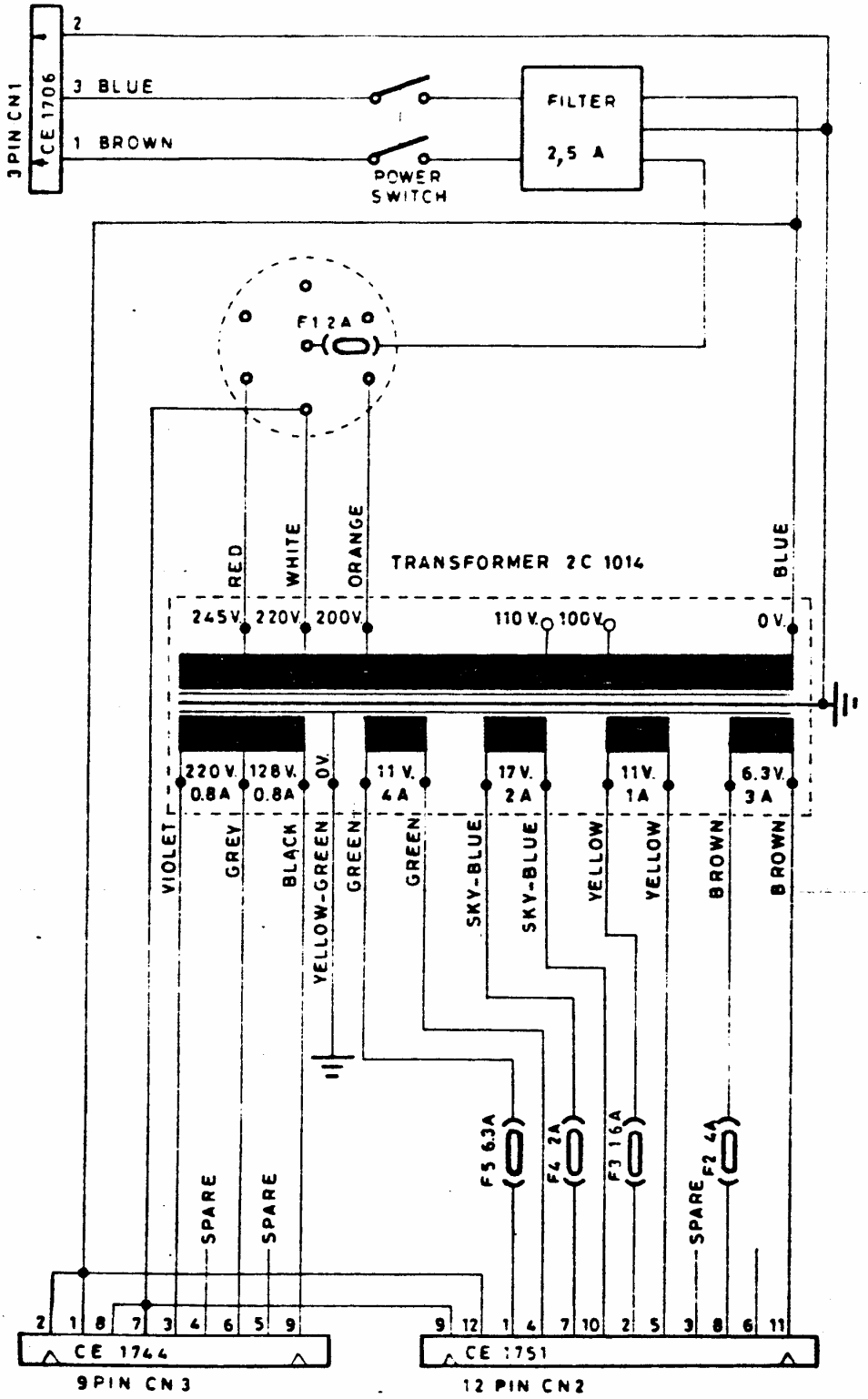

TRASFORMATORE 2C1014
USATO PER MONITOR
HANTAREX MTC 900

Telaio alimentazioni
"
CEC 157 "

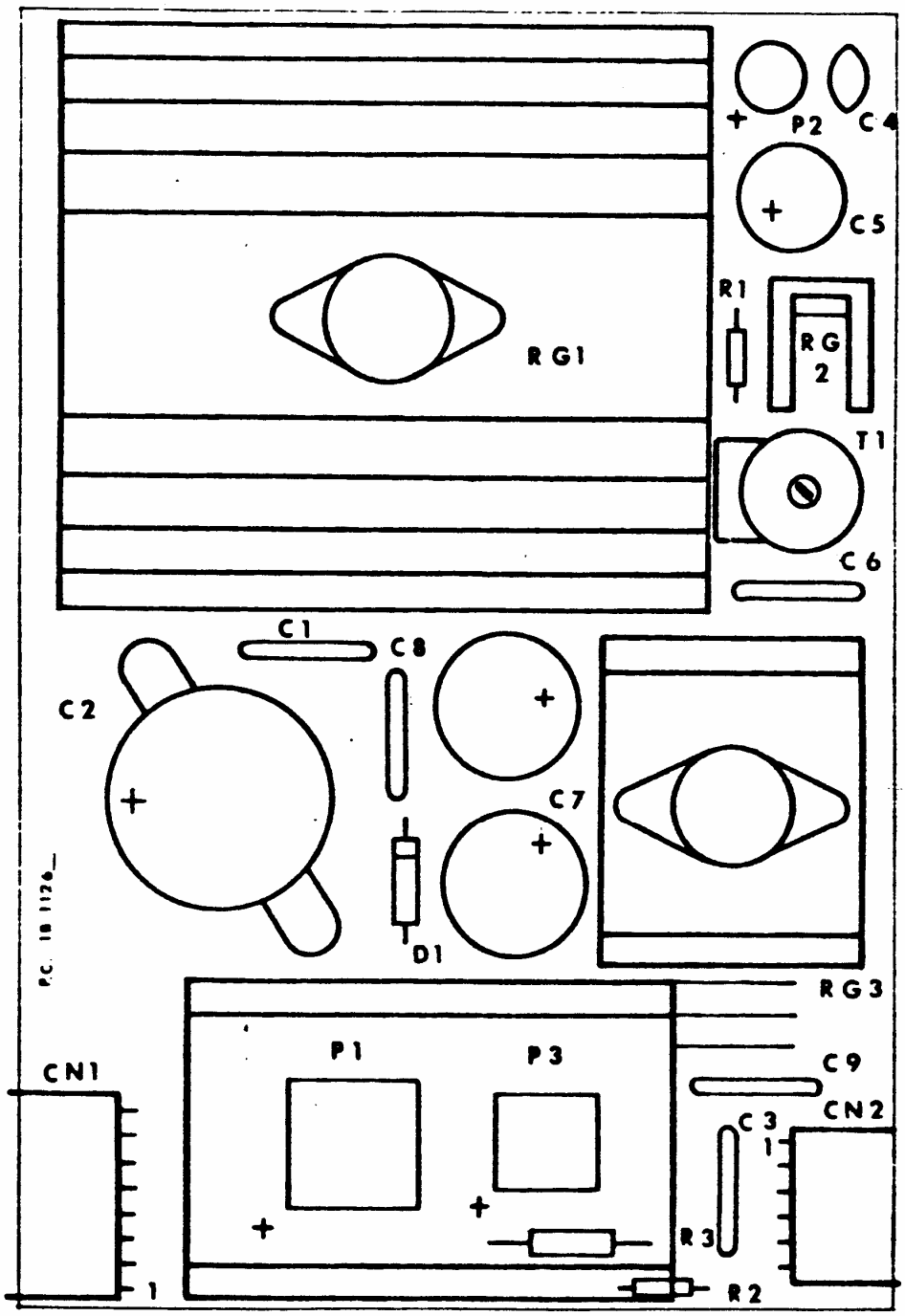

CEC 110 POWER board 1B1126

PC 1B 1126

Component list POWER BOARD ASSEMBLY CBC 110

ITEM No	PART DESIGNATION	CODE PART No	DESCRIPTION	REQD No
1	PC 1	CE 2070	Printed Circuit 1B 1126	1
2	BC 1	CE 1405	50V. 10 AMP Rect.Brid.(KBPC 10-005)	1
3	P 2	CE 1233	50V. 1 AMP Rect.Brid.(W-005)	1
4	P 3	CE 1276	50V. 3 AMP Rect.Brid.(KBPC* 1-005)	1
5	RG 1	CE 1238	+5V. 5 AMP Voltage Regulator (MA 78H05 KC)	1
6	RG 2	CE 1648	-5V. 1 AMP Voltage Regulator (MA 7905 UC)	1
7	RG 3	CE 1688	+12V.1 AMP Voltage Regulator (MA 7812 KC)	1
8	D 1	CE 1299	1N 5400 Diode	1
9	CN 2	CE 1332	6 Pin Modu 1 Male Connector	1
10	CN 1	CE 1361	8 Pin Modu 1 Male Connector	1
11	HS 1	CE 1566	Heat Sink 16/75/2	1
12	HS 2	CE 1278	Heat Sink 41/100/B	1
13	HS 3	CE 1099	Heat Sink ML 26/50 TO-220	1
14	HS 4	CE 1529	Heat Sink 16/40/B	1
15	C 1-3-6-8-9	CE 1261	0.33 MF 50V. Polies.film Capac.	5
16	C 2	CE 1384	10.000MF 16V. Electr.Cap.Sin. Ended	1
17	C 4	CE 1005	0.1MF 50V. Ceramic Capacitor	1
18	C 5	CE 1026	1.000MF 25V. Elec.Cap.Sin.End.	1
19	C 7	CE 1579	2.200MF 25V. Elec.Cap.Sin.End.	2
20	R 1	CE 1170	1 KOHM 1/4W. 5% Carbon Resistor	1
21	T 1		47 OHM 1 Turn Vertical Trimmer (Commonly mounted 22 OHM 1/4W.5% Carbon Resistor)	1

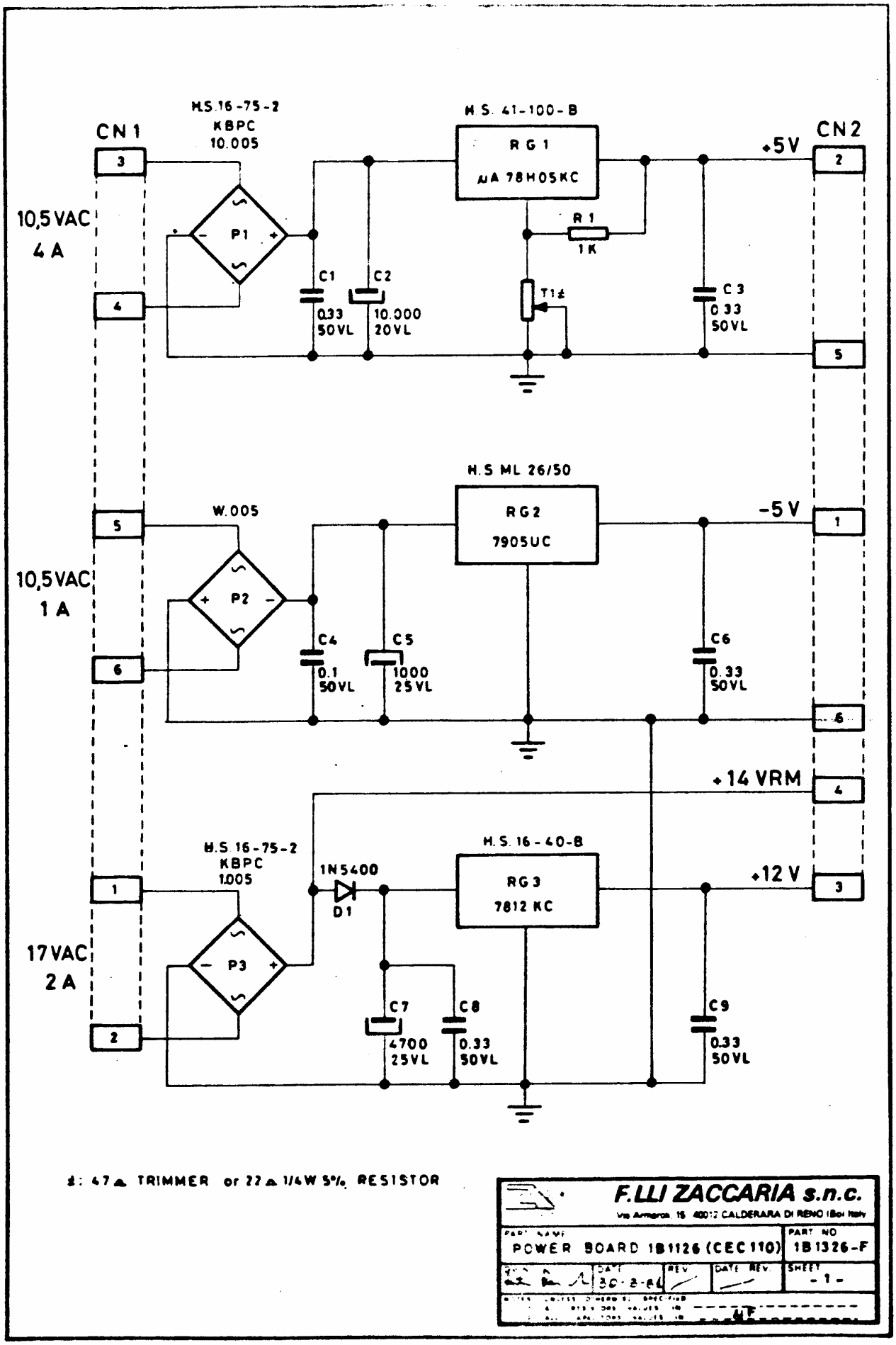
CN1
CN2
H.S.16-75-2
KBPC
10.005
H.S. 41-100-B
RG1
μA 78H05KC
+5V
10,5VAC
4 A
P1
R1
1K
C1
0.33
50VL
C2
10.000
20VL
T1*
C3
0.33
50VL
H.S ML 26/50
RG2
7905UC
-5V
W.005
10,5VAC
1 A
P2
C4
0.1
50VL
C5
1000
25VL
C6
0.33
50VL
+14 VRM
H.S 16-75-2
KBPC
1.005
1N5400
D1
H.S. 16-40-B
RG3
7812 KC
+12 V
17VAC
2 A
P3
C7
4700
25VL
C8
0.33
50VL
C9
0.33
50VL
*: 47Ω TRIMMER or 22Ω 1/4W 5% RESISTOR
F.LLI ZACCARIA s.n.c.
Via Armando 15 40012 CALDERARA DI RENO (Bol) Italy
PART NAME
POWER BOARD 1B1126 (CEC 110)
PART NO
1B1326-F
DATE
30-2-86
REV.
DATE REV.
SHEET
-1-

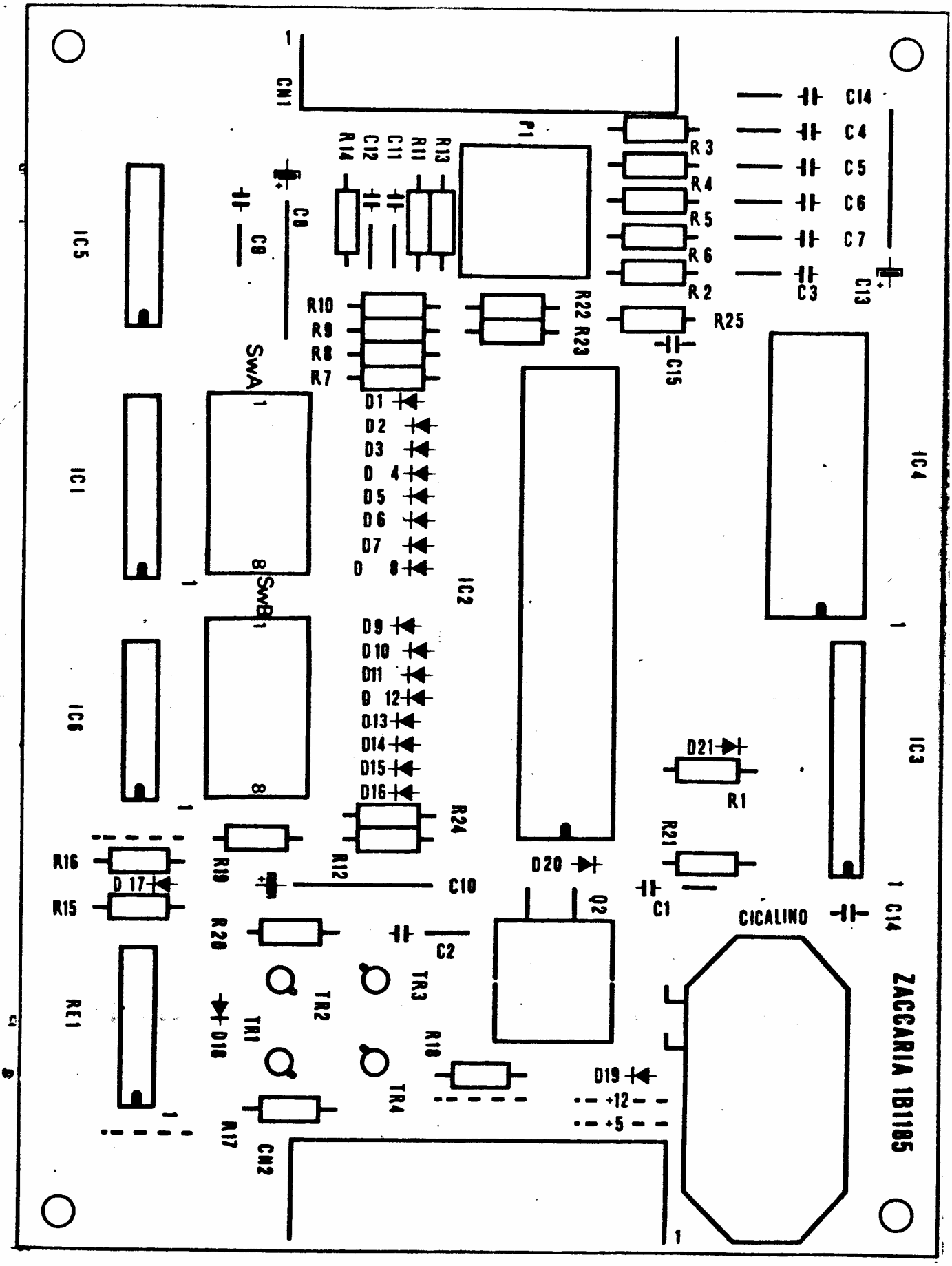
CN1
P1
R14
C12
C11
R11
R13
C8
C9
IC5
IC1
IC6
RE1
R10
R9
R8
R7
SwA
SwB
D1
D2
D3
D4
D5
D6
D7
D8
IC2
D9
D10
D11
D12
D13
D14
D15
D16
R24
R12
R16
D17
R15
R19
C10
R20
C2
TR1
TR2
TR3
TR4
D18
R17
CN2
R18
D19
+12
+5
D20
Q2
R22
R23
R3
R4
R5
R6
R2
R25
C15
C14
C4
C5
C6
C7
C3
C13
IC4
IC3
D21
R1
R21
C1
CICALINO
C14
ZACCARIA 1B1185

PC 1B 1185

Component list COIN SWS ADJ. WITH MICROPROCESSOR 8035 CEC 182

ITEM No	PART DESIGNATION	CODE PART No	DESCRIPTION	RECD No
1	P.C.	CE 2150	Printed Circuit 1B 1185	1
2	CN1-CN2	CE 1590	Male Connector 15PINS 90°280382	2
3	IC1	CE 1055	Integrated Circuit 40097	1
4	IC2	CE 1729	Microprocessor 8035	1
5	IC3	CE 1681	Integrated Circuit 74LS373	1
6	IC4	CE 1687	Integrated Circuit 2716	1
7	IC5	CE 3005	Integrated Circuit 556	1
8	IC6	CE 1134	Integrated Circuit 74LS00	1
9	IC7-IC8	CE 1480	Dip Switches 8CT	2
10	R12	CE 1078	Carbon Resistor 180 OHM 1/4W.	1
11	R2÷R6	CE 1077	Carbon Resistor 47 OHM 1/4W.	5
12	R18	CE 1039	Carbon Resistor 560 OHM 1/4W.	1
13	R20÷R23-R25	CE 1170	Carbon Resistor 1KOHM 1/4W.	5
14	R24	CE 1024	Carbon Resistor 3,3KOHM 1/4W.	1
15	R15-R16-R17	CE 1165	Carbon Resistor 4,7KOHM 1/4W.	3
16	R1-R7÷R10-R19	CE 1171	Carbon Resistor 10KOHM 1/4W.	7
17	R13	CE 1193	Carbon Resistor 47KOHM 1/4W.	1
18	R14	CE 1252	Carbon Resistor 220KOHM 1/4W.	1
19	R11	CE 1036	Carbon Resistor 1MOHM 1/4W.	1
20	C1-C2	CE 1298	Capacitor Ceramic 22Pf	2
21	C11	CE 1159	Capacitor Ceramic 1.000Pf	1
22	C9	CE 1029	Capacitor Ceramic10,000Pf	1
23	C3÷C7-C12-C14	CE 1005	Capacitor Ceramic 0,1 Mf	7
24	C8	CE 1206	Capacitor Tantalum 1 Mf	1
25	C10- 17	CE 1189	Capacitor Tantalum 2,2 Mf	1
26	C13	CE 1118	Capacitor Electr.vert. 100 Mf	1
27	D1÷D18-D20-D21	CE 1011	Diode 1N 4148	20
28	D19	CE 1009	Diode 1N 4004	1
29	Q1-Q2	CE 1438	Transistor BC 548	2
30	Q3	CE 1290	Transistor BC 337	1
31	Q4	CE 1814	Transistor BC 327	1
32	PS1	CE 3063	Pulsante	1
33	QZ1	CE 1743	Cristal Oscillator 6 MHZ	1
34	Cicalino		Type	1
35	RE1	CEC 040	Relais V23100-V4005-A000	1
	(RE1)	(CEC 161	Relais V23100-V4305-C000)	(1)
	IC 4	RE 260	B 2716 MOS I.C. 2048x8 EPROM	
			Type 1 Coin Sws.Adj.	
N.B.	C16		CAPACITOR TANTALUM 10 µ 10	

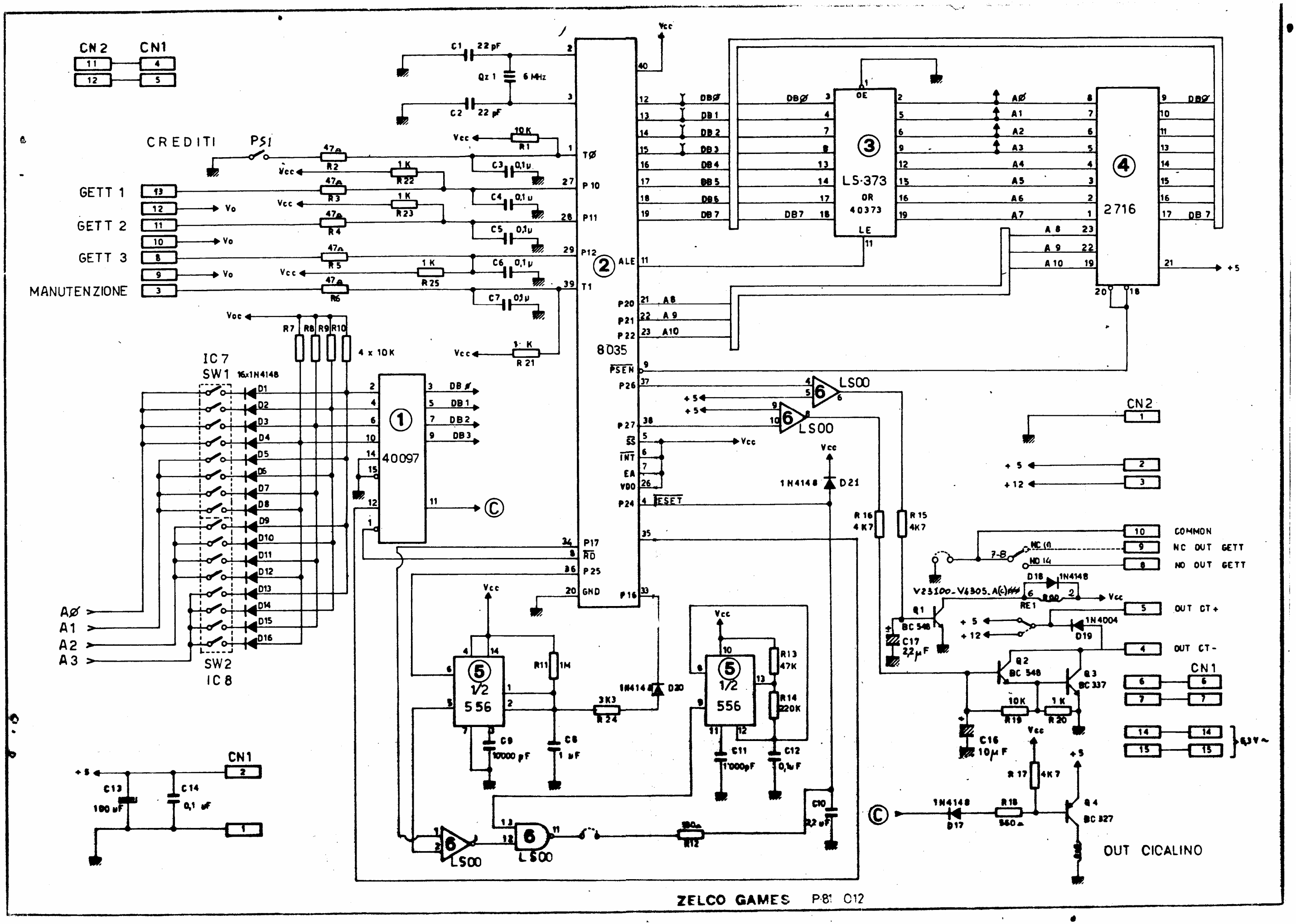

ZELCO GAMES P.81 C12

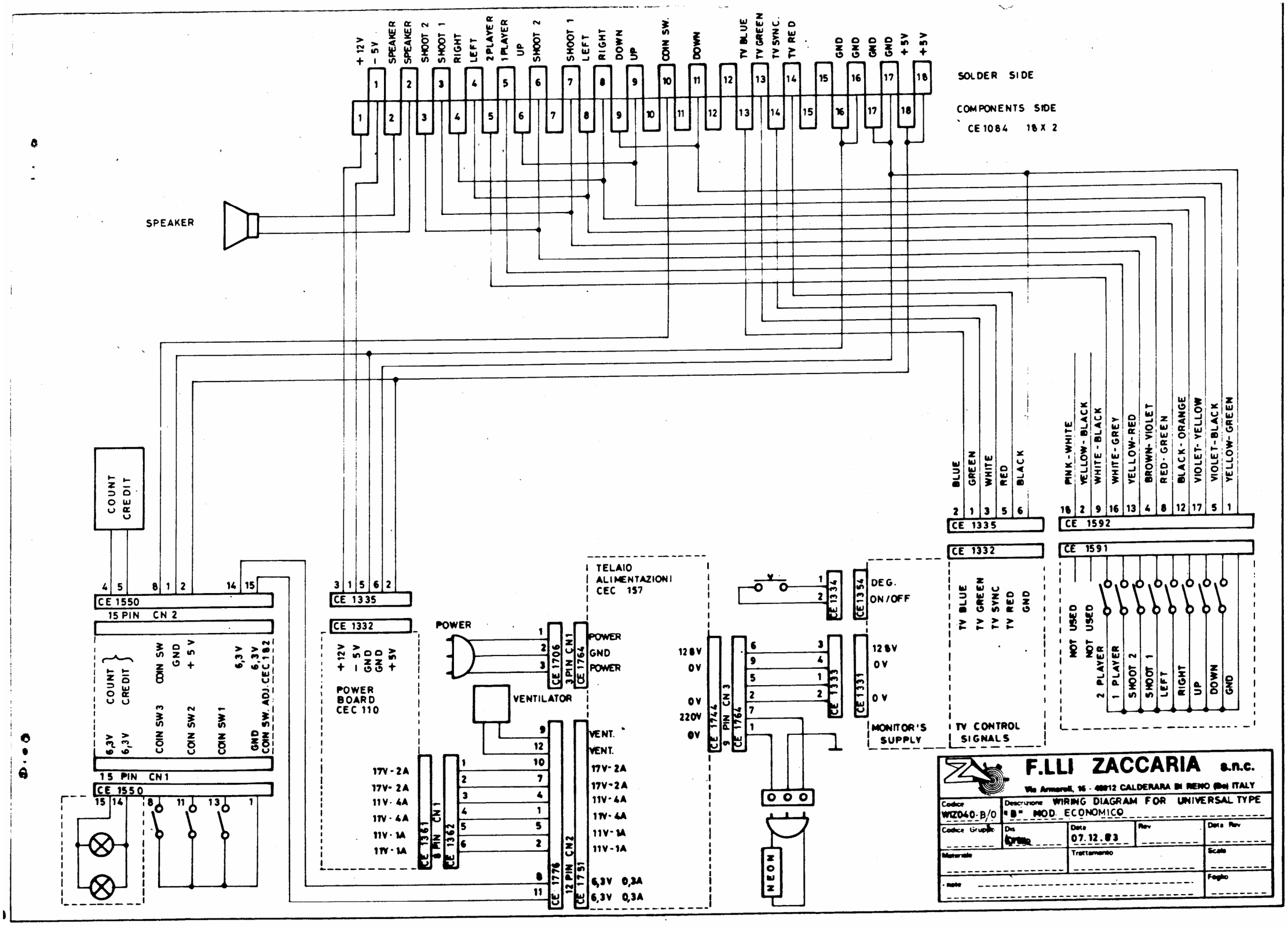
+12V
-5V
SPEAKER
SPEAKER
SHOOT 2
SHOOT 1
RIGHT
LEFT
2 PLAYER
1 PLAYER
UP
SHOOT 2
SHOOT 1
LEFT
RIGHT
DOWN
UP
COIN SW.
DOWN
TV BLUE
TV GREEN
TV SYNC.
TV RED
GND
GND
GND
GND
+5V
+5V
SOLDER SIDE
COMPONENTS SIDE
CE 1084 18 X 2
SPEAKER
COUNT
CREDIT
CE 1550
15 PIN CN 2
COUNT
CREDIT
COIN SW
GND
+5V
6,3V
6,3V
6,3V
6,3V
COIN SW3
COIN SW2
COIN SW1
GND
COIN SW. ADJ. CEC 182
15 PIN CN1
CE 1550
CE 1335
CE 1332
+12V
-5V
GND
GND
+5V
POWER BOARD CEC 110
POWER
CE 1706
3 PIN CN1
CE 1764
POWER
GND
POWER
VENTILATOR
17V-2A
17V-2A
11V-4A
11V-4A
11V-1A
11V-1A
CE 1361
8 PIN CN1
CE 1362
CE 1776
12 PIN CN2
CE 1751
VENT.
VENT.
17V-2A
17V-2A
11V-4A
11V-4A
11V-1A
11V-1A
6,3V 0,3A
6,3V 0,3A
TELAIO ALIMENTAZIONI CEC 157
12,8V
0V
0V
220V
0V
CE 1744
9 PIN CN 3
CE 1764
CE 1334
CE 1333
CE 1331
CE 1354
DEG. ON/OFF
12,8V
0V
0V
MONITOR'S SUPPLY
NEON
BLUE
GREEN
WHITE
RED
BLACK
CE 1335
CE 1332
TV BLUE
TV GREEN
TV SYNC
TV RED
GND
TV CONTROL SIGNALS
PINK-WHITE
YELLOW-BLACK
WHITE-BLACK
WHITE-GREY
YELLOW-RED
BROWN-VIOLET
RED-GREEN
BLACK-ORANGE
VIOLET-YELLOW
VIOLET-BLACK
YELLOW-GREEN
CE 1592
CE 1591
NOT USED
NOT USED
2 PLAYER
1 PLAYER
SHOOT 2
SHOOT 1
LEFT
RIGHT
UP
DOWN
GND
F.LLI ZACCARIA s.n.c.
Via Armaroli, 16 - 40012 CALDERARA DI RENO (Bo) ITALY
Codice WIZ040-B/0
Descrizione WIRING DIAGRAM FOR UNIVERSAL TYPE "B" MOD. ECONOMICO
Codice Gruppo
Dis
Data 07.12.83
Rev
Data Rev
Materiale
Trattamento
Scala
note
Foglio